6.4m CENTRE CAB

GENERAL ARRANGEMENT

PRINCIPAL PARTICULARS

LOH:	6.4 m (Hull Only)
BEAM:	2.5m
DEPTH:	1.35m
DRAFT:	0.36m (HULL)
D/RISE:	12° @ TRAN.
DISPL:	1300kg DRY -w- 200HP
ENG:	25" (XL SHAFT)

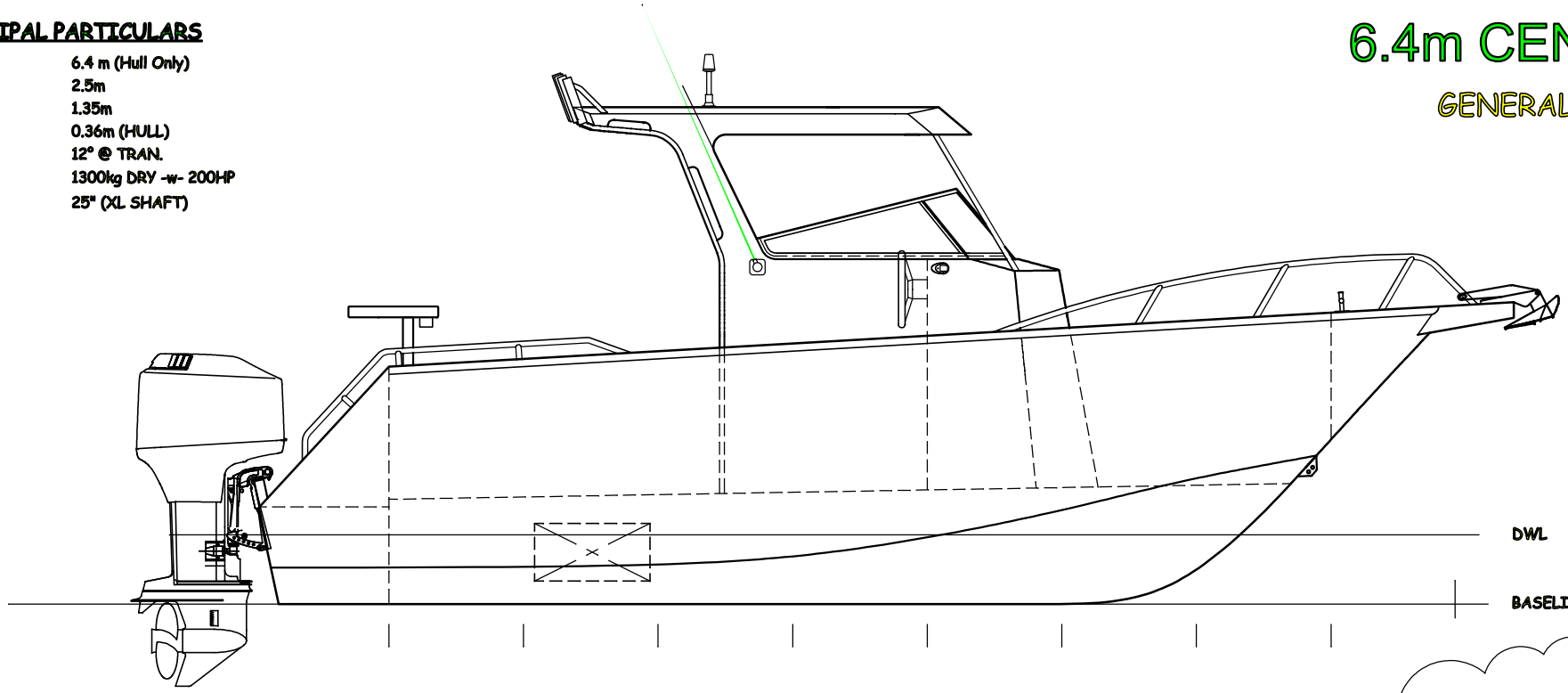

PROFILE

NOTE: 2500mm BEAM

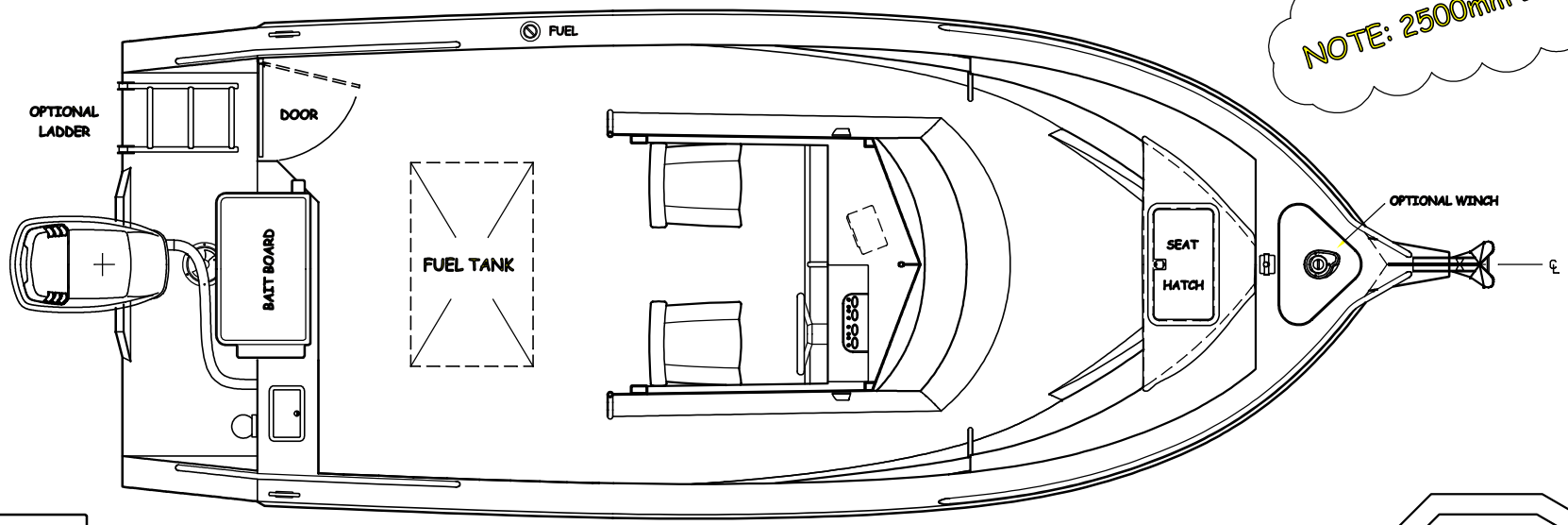

PLAN

www.platealloy.com

CTMD

Kit Notes: Accessories, Launcher, Ladder and Fuel Tank etc..not included in Flat Pack Kit

This drawing is the property of Plate Alloy Australia - 12-14 Elma Road, Cheltenham, Victoria, 3192, Australia. - Phone: (+613) 9555 6399 Fax: (+613) 9555 6499

PLATE ALLOY